Rev.	Description	Date	Drawn by	Checked by	Approved by
A	New Drawing	2006/12/24	Michael	Gavin	Stephen

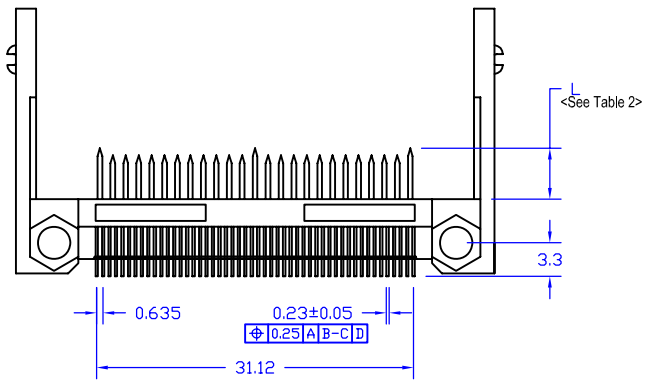

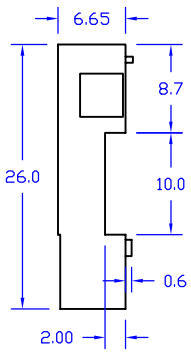

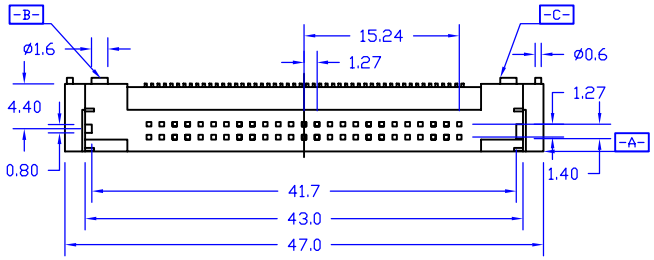

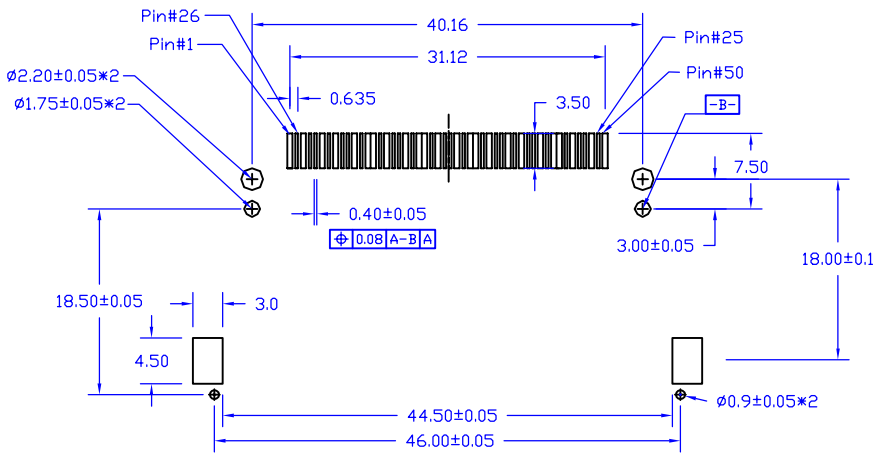

PCB Layout
(Top View)

NOTE:

Material and Finish:
1. Housing: Hi. Temp. Plastic (UL94V-0), White.
2. Terminal: Copper Alloy, Gold Plating on Contact Area, Tin Plating on solder Tail.
3. Solder Tab: Copper Alloy, Tin Plating.

Electrical Characteristics:
1. Current Rating: 0.5 Amp. Max..
2. Dielectric Withstand Voltage: 500V AC RMS for 60Seconds.
3. Insulation Resistance: 1000M Ohms Min. at 500V DC.
4. Contact Resistance: 40m Ohms Max..

Mechanical Characteristics:
1. Operating Temperature: -40°C ~ +85°C
2. Contact Us for Customization.

Table 1

Part No.	Dimensions			
H=6.65mm	Pos.	A	B	C
AEMCBS07B-050L	50			

Table 2

Part No. for L	
Pin Number	Dimensions
25,26	3.5mm
All Other Pins	4.25mm
1,13,38,50	5.00mm

RoHS Compliant

Tolerance	
0.0	±0.30
0.00	±0.20
0.000	±0.10

Scale 1 : 1 | Unit mm

Drawn By: Michael
Checked By: Gavin
Approved By: Stephen

AECONN

Title
1.27mm Pitch, CF Card, Surface Mount, 50P, Normal Type, Standoff:2.0mm

AECONN Technology Corp.

Drawing No. MC007-S-01
Page 1/1